Thanks for shopping with Jeco®

26" Hudson Fire Pit

SKU# FP001/ 15030060

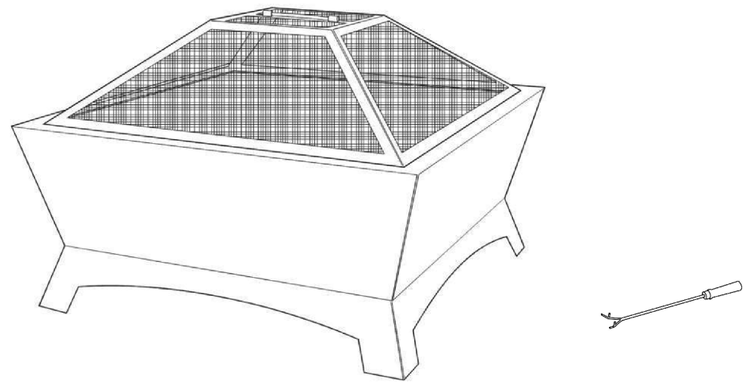

Parts List:

A. Screen Qty:1	B. Glider Qty:2	C. Base Qty:1 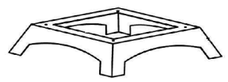
D. Poker Qty:1	E. Screw Qty:4 (M6*10mm)	

JECO

1-800-893-3006
Ontario, CA 91761

Made in China

If you have questions regarding this product, call 1-800-893-3006 Mon.-Fri. 9:00-5:00 PST (California) and ask for our product specialists, or e-mail: cs@jeco-inc.com
See many more products on the Internet!
www.jeco-inc.com

420*285mm 2016-12-19

Warning: Serious injury or death can occur if caution is not used. To reduce the risk of serious injury, read all important precautions and instructions in this manual and all warnings on your product before using it.

⚠ **PROPOSITION 65 WARNING:** Fuel used in wood and charcoal burning appliances and the products of combustion of such fuels contain chemicals known to cause cancer, birth defects or other reproductive harm.

1. OUTDOOR USE ONLY!
2. DO NOT use this unit on a wooden deck or on combustible surfaces such as dry grass, leaves, mulch, etc.
3. DO NOT use this unit near heat sensitive or combustible structures such as vinyl or wood siding.
4. When in use, keep the fire pit area clear and at least 60cm (24inch) side clearance from combustible gasoline and other flammable liquid and vapors.
5. DO NOT use gasoline or kerosene. Use only a method of lighting, which is acceptable. This unit has been designed for burning of charcoal and untreated Wood only. Do not place burning material over 75% of the full capacity for safe use.
6. NEVER LEAVE FIRE UNATTENDED! Do not allow small children near flame. Hot embers can fly out of basin in breezy conditions. Adequate fire extinguishing material should be readily available.
7. CARBON MONOXIDE HAZARD
   i. Burning charcoal inside can kill you. It gives off carbon monoxide, which has no odor.
   ii. NEVER burn charcoal inside, vehicles or tents.
8. DO NOT use this fire pit as a cooking appliance. This fire pit is not designed to be used for grilling food.
9. DO NOT attempt to move your fire pit while hot or in use.
10. Read all safety guidelines, warnings, instructions, and operating rules carefully before assembling and using this product.
11. Some parts may contain sharp edges – especially as noted in manual. Wear protective gloves if necessary.

To Assemble:

Step 1: Connect fire pit (B) to the base(C) using M6 Bolts (E).

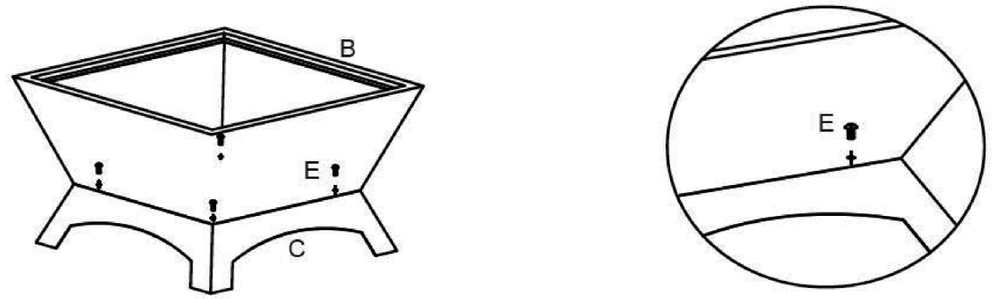

Step 2: Place the mesh screen (A) over the fire pit (B). The fire pit is now ready for use.

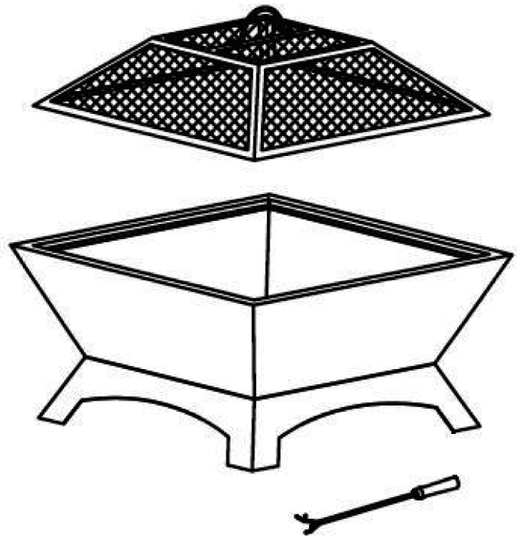

Now, your fire pit is ready for use.